Flagmore

Nordic fiberglass flagpole

Productspecifications
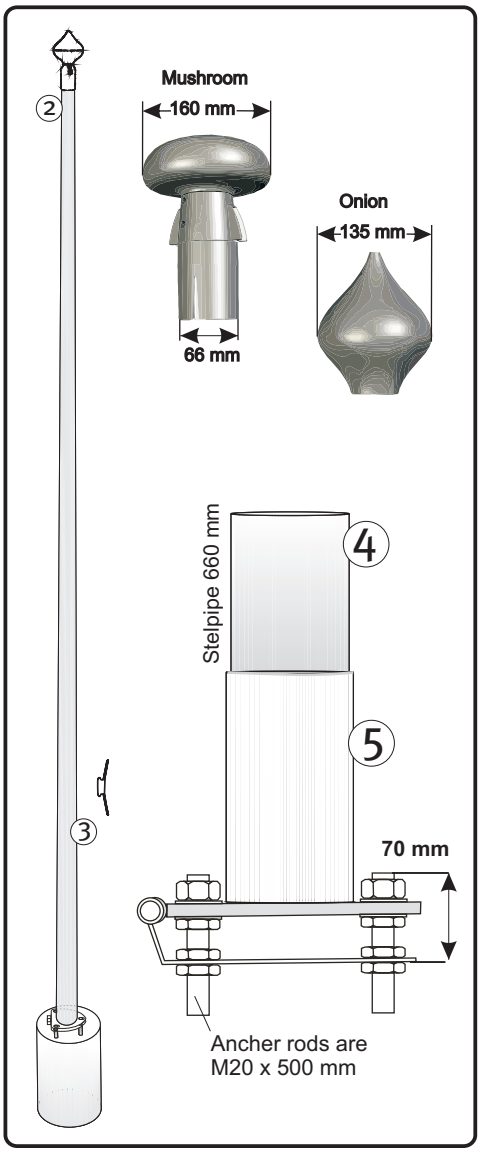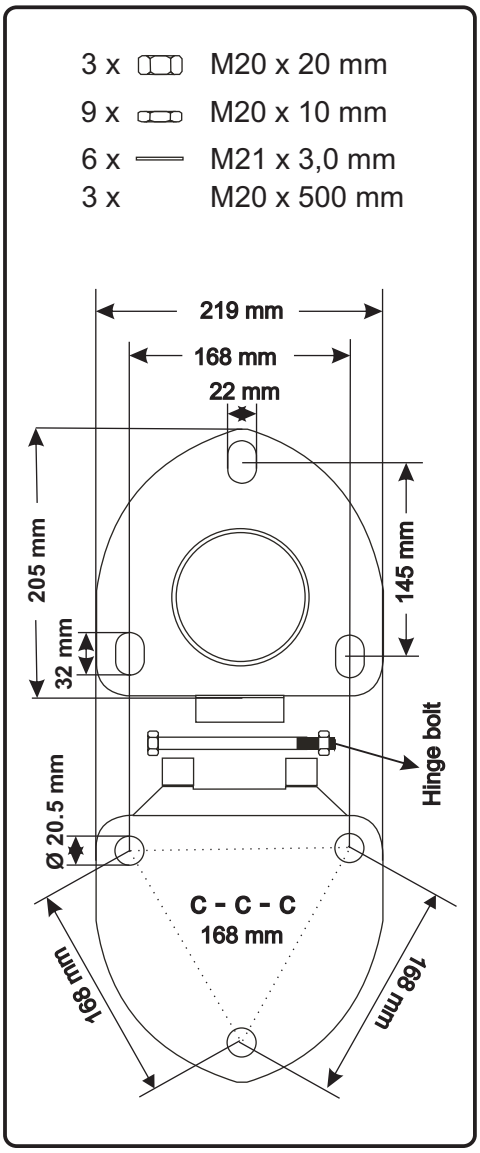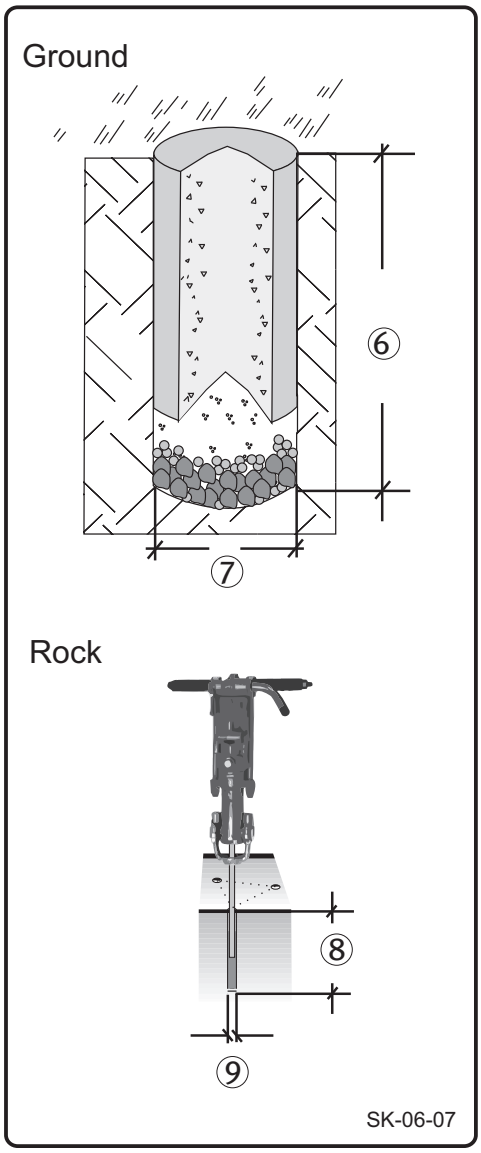
Nordic fiberglass flagpole		6 meter	7 meter	8 meter	9 meter	10 meter	11 meter	12 meter
Complete weight with steelwork		23 kg	25 kg	27 kg	29 kg	37 kg	40 kg	43 kg
Topp diameter of pole	②	65 mm	65 mm	65 mm	65 mm	65 mm	65 mm	65 mm
Height to cleate	③	1500 mm	1500 mm	1500 mm	1500 mm	1500 mm	1500 mm	1500 mm
Length of steelpipe	④	660 mm	660 mm	660 mm	660 mm	660 mm	660 mm	660 mm
Thickness of steelpipe	④	4,0 mm	4,0 mm	4,0 mm	4,0 mm	5,8 mm	5,8 mm	5,8 mm
Diameter of steelpipe	④	102 mm	102 mm	102 mm	102 mm	121 mm	121 mm	121 mm
Butt diameter of pole	⑤	120 mm	120 mm	120 mm	120 mm	140 mm	140 mm	140 mm
Fiberglass thickness ± 0,5 mm	⑤	3,0 mm	3,0 mm	3,0 mm	3,0 mm	3,5 mm	3,5 mm	3,5 mm
Deep of ground foundation	⑥	800 mm	800 mm	800 mm	900 mm	1000 mm	1100 mm	1200 mm
Diameter of ground foundation	⑦	300 mm	300 mm	300 mm	300 mm	400 mm	400 mm	400 mm
Hole diameter for rock install.	⑨	35 mm	35 mm	35 mm	35 mm	35 mm	35 mm	35 mm
Deep of hole for rock install.	⑧	300 mm	300 mm	300 mm	400 mm	400 mm	400 mm	400 mm
Rekommended Flagsize		150 cm	200 cm	200 cm	240 cm	240 cm	300 cm	300 cm